MURA 2 AL5300

IP67 IK08

Benefits

- Vertical orientation indicator allows for ease of elevating
- Smart and compact styling suitable for smaller applications and indoor areas allowing for use across areas
- Three reflector options to adapt to wide range of applications or for use in areas requiring varied lighting for a consistent aesthetic

Technical Features

- IP67 and IK08 rated
- Class I as standard, Class II available on select ranges of body type 3 upon request
- Electronic ballast versions available.
- Available in 3 beam types: Double Asymmetric, Asymmetric and Symmetric
- Options of beam widths for most types of lamp
- Die cast aluminium body and front frame
- Galvanised and painted steel bracket with vertical orientation indicator
- Anti-aging silicon rubber gasket
- Tempered front glass sealed to the front cover
- Multiple light source options available

Applications

- Area

Colours

- Black
- Titanium
- Silver

Dimensions

Dimensions in mm

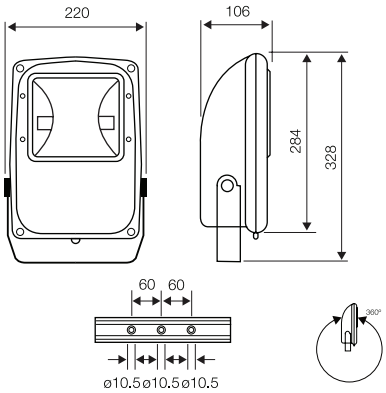

Body Type 6
AL5364, AL5367, AL5362, AL5365, AL5363, AL5366

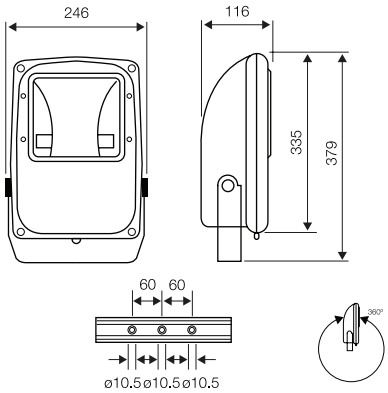

Body Type 7
AL5377, AL5372, AL5375, AL5373, AL5376

Technical Specifications

	Lamp Wattage	Light Source	Lamp Holder	CCT	Conventional Ballast	Electronic Ballast Available (E)	Body Type	Light Distribution Type	Weight (kg)	Wind Area (m2)	Mount
AL5364	70W	MBI-D	RX7s	3000	Y	Y	6	Symmetric Medium	4.101kg	0.056	Stirrup or Wall Mount
	70W	MBI	G12	3000	Y	Y	6		3.90kg	0.056	
	35W	MBI	G12	3000	Y	N	6		3.90kg	0.056	
AL5367	70W	MBI-D	RX7s	3000	Y	Y	6	Symmetric Narrow	4.101kg	0.056	Stirrup or Wall Mount
	70W	MBI	G12	3000	Y	Y	6		3.90kg	0.056	
	35W	MBI	G12	3000	Y	N	6		3.90kg	0.056	
AL5362	70W	MBI-D	RX7s	3000	Y	Y	6	Asymmetric Wide	8.71kg	0.056	Stirrup or Wall Mount
	70W	MBI	G12	3000	Y	Y	6		9.58kg	0.056	
	35W	MBI	G12	3000	Y	N	6		10.76kg	0.056	
AL5365	70W	MBI-D	RX7s	3000	Y	Y	6	Asymmetric Medium	8.71kg	0.056	Stirrup or Wall Mount
	70W	MBI	G12	3000	N	Y	6		9.58kg	0.056	
AL5363	70W	MBI-D	RX7s	3000	Y	Y	6	Double Asymmetric Wide	4.101kg	0.056	Stirrup or Wall Mount
	70W	MBI	G12	3000	Y	Y	6		3.90kg	0.056	
	35W	MBI	G12	3000	Y	N	6		3.90kg	0.056	
	70W	SONT-D	RX7s	2000	Y	N	6		4.03kg	0.056	
AL5366	70W	MBI-D	RX7s	3000	Y	Y	6	Double Asymmetric Medium	4.101kg	0.056	Stirrup or Wall Mount
	70W	MBI	G12	3000	N	Y	6		3.90kg	0.056	
	35W	MBI	G12	3000	Y	N	6		3.90kg	0.056	
AL5377	150W	MBI-D	RX7s	3000	Y	Y	7	Symmetric Medium	5.60kg	0.075	Stirrup or Wall Mount
	150W	MBI	G12	3000	Y	Y	7		4.28kg	0.075	
AL5372	150W	MBI-D	RX7s	3000	Y	Y	7	Double Asymmetric Medium	5.60kg	0.075	Stirrup or Wall Mount
	150W	SONP-TD	RX7s	2000	Y	N	7		5.60kg	0.075	
	150W	MBI	G12	3000	Y	Y	7		4.28kg	0.075	
AL5375	150W	MBI-D	RX7s	3000	Y	Y	7	Asymmetric Medium	5.60kg	0.075	Stirrup or Wall Mount
	150W	MBI	G12	3000	N	Y	7		4.28kg	0.075	
AL5373	150W	MBI-D	RX7s	3000	Y	Y	7	Double Asymmetric Wide	5.60kg	0.075	Stirrup or Wall Mount
	150W	SONP-TD	RX7s	2000	Y	N	7		5.60kg	0.075	
	150W	MBI	G12	3000	Y	Y	7		4.28kg	0.075	
AL5376	150W	MBI-D	RX7s	3000	Y	N	7	Double Asymmetric Med	5.60kg	0.075	Stirrup or Wall Mount
	150W	MBI-D	RX7s	3000	N	Y	7	Double Asymmetric Med/Narrow	4.28kg	0.075	
	150W	MBI	G12	3000	N	Y	7		4.28kg	0.075	